Installation Instruction

LED Vapour Tight Fixture

Applicable models:
PRO-VT

INSTRUCTIONS:

Always turn off the power supply from main circuit breaker first!

A:Surface Mounting

1. Locate drill holes for mounting brackets. Use hardware found in hardware kit. Mount bracket to surface.
Make sure at least 2 brackets installed in 4ft fixture and 3 brackets installed in 8ft fixture.

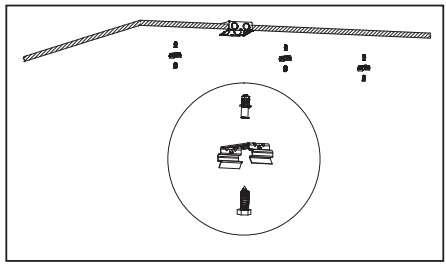

2. Fix mounting bracket on fixtures.
Fix the end to installation surface with expansion screw.

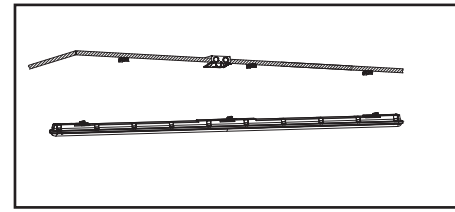

3 . Secure mounting clips to housing recesses by firmly pressing them into place until both sides of the clip are secured.

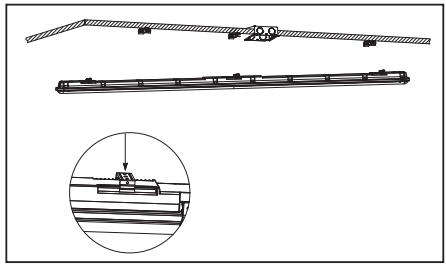

4 . Release latches by pulling top of latch away from housing.

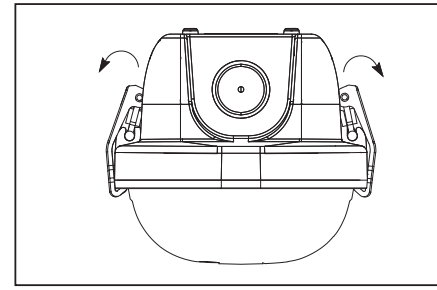

5. Without touching LED boards,detach LED tray and lens from fixture.

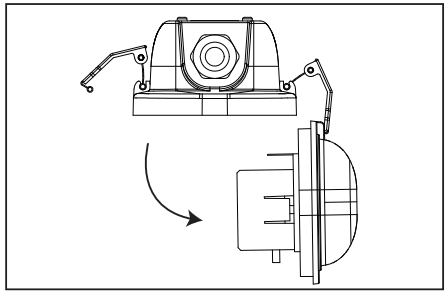

6 . Run the wire through the waterproof connector, then install the waterproof connector.

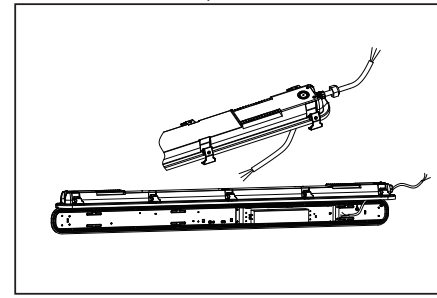

Installation Instruction

LED Vapour Tight Fixture

Applicable models:
PRO-VT

7 .Connect power to driver as shown in the figure. (the flexible cord supplied by others)

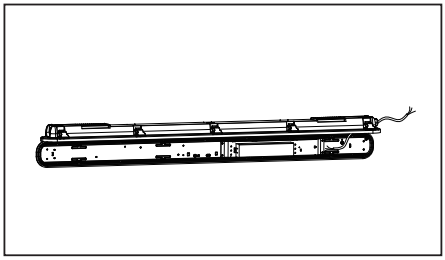

8 .Reattach LED tray and lens to fixture by reversing step 4.

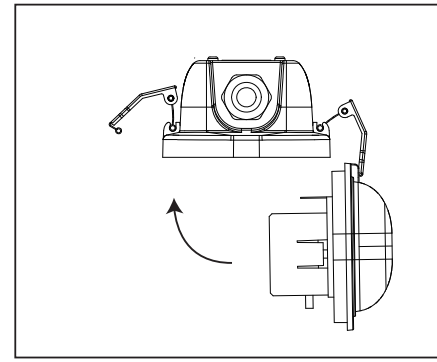

9. Secure lens to housing with lens latches.

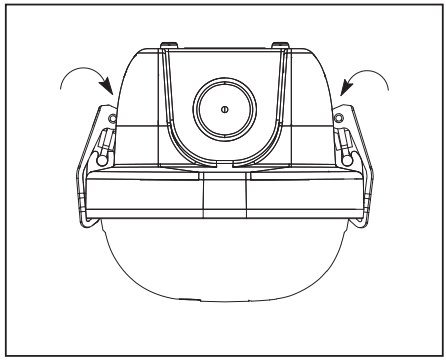

Installation Instruction

LED Vapour Tight Fixture

Applicable models:
PRO-VT

B: Chain Suspended Mounting

1.Attach V-bracket to each mounting clip by spreading the ends of the V-bracket apart and then inserting the legs into the holes in the side of the mounting clips.

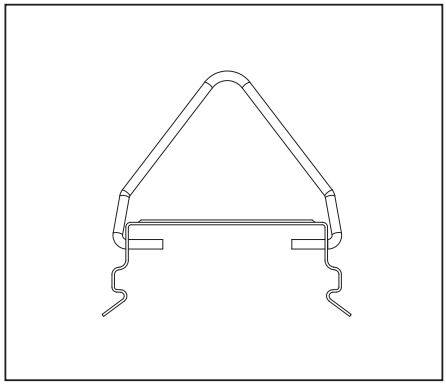

2.Secure mounting clips to housing recesses by firmly pressing them into place until both sides of the clip are secured.Hang fixture from customer supplied chain using V-brackets.

Make sure at least 2 brackets installed in 4ft fixture and 3 brackets installed in 8ft fixture.

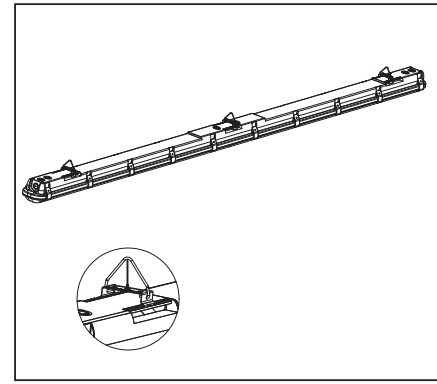

3.Hang fixture from customer supplied chain using V-brackets.

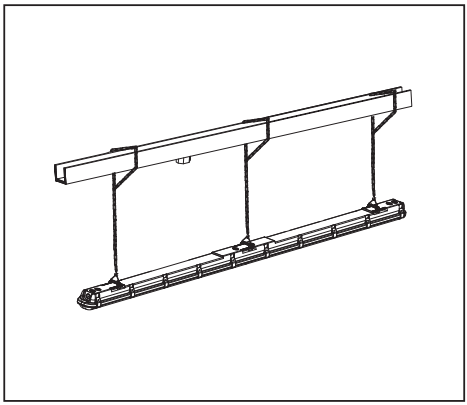

4.Release latches by pulling top of latch away from housing.

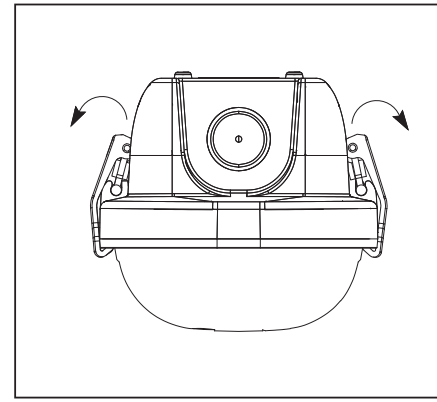

Installation Instruction

LED Vapour Tight Fixture

Applicable models:
PRO-VT

5.Without touching LED boards,detach LED tray and lens from fixture.

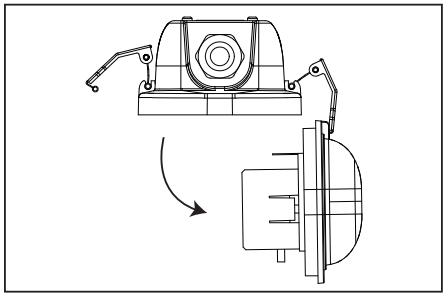

6.Run the wire through the waterproof connector, then install the waterproof connector.

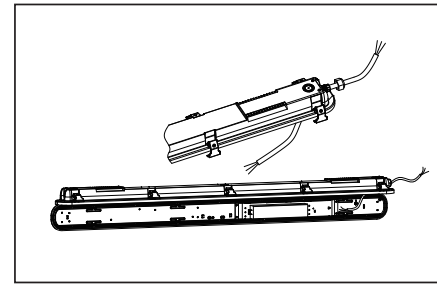

7.Connect power to driver as shown in the figure. (the flexible cord supplied by others)

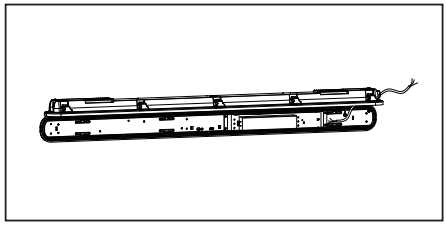

8.Reattach LED tray and lens to fixture by reversing step 5.

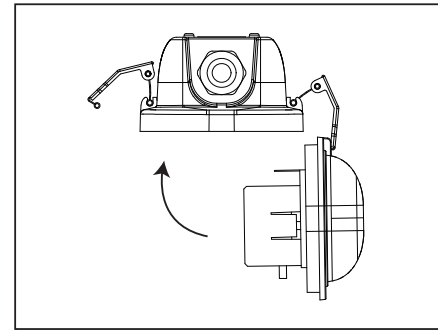

9.Secure lens to housing with lens latches.

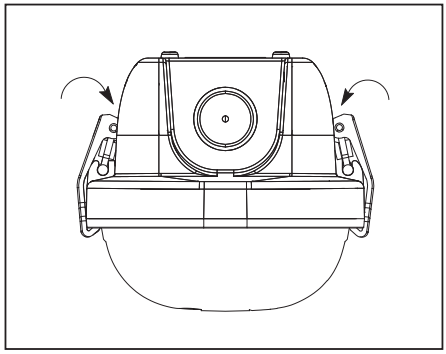

Installation Instruction

LED Vapour Tight Fixture

Applicable models:
PRO-VT

Field-Adjustable Wattage & CCT

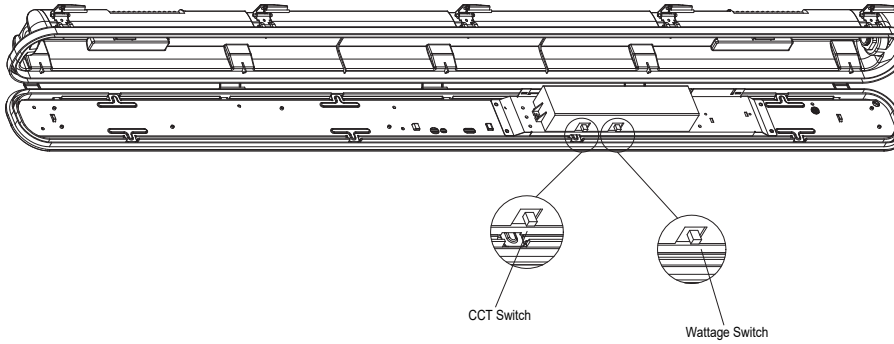

The end users may adjust the color temperature and lumen output respectively by the two DIP switch.Each DIP switch is accommodated with 3 options (left, middle and right),corresponding to 3 color temperatures and 3 powers respectively, which can perform the desired color temperature and lumen output combination.

1.DIP switches are located onto the side of the driver.

2.Select a wattage and color temperature by sliding switch left or right respectively to the desired value.