Installation Instructions

LED Backlit Panel

Applicable models:
RGD-BLP7//D/A/PIR**
RGD-BLP7//D/A/PIR-BT**

CCT & Wattage Selectable

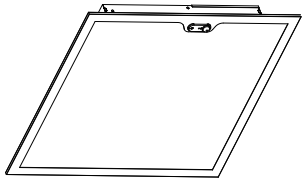

Intertek

SAFETY INFORMATION

Ensure that the manual is read in full before attempting to assemble, operate, or install the product. Failure to do so can lead to electric shock, fire, or other injuries that could be hazardous or even fatal.

- Be sure the electricity to the wires you are working on is shut off. Either remove the fuse or turn off the circuit breaker.
- Changes or modifications that are not expressly approved by the party responsible for compliance can void the user's authority to operate the equipment.

CAUTION:

- The fixture body is one piece. Do not disassemble it.
- This panel fixture can be used with most dimmers that operate on a 0-10v system.
- Do not apply pressure on the panel face. Handle the fixture by the outer frame (the metal trim housing). Damage to LEDs may occur if excessive force is applied to central panel face.

SAFETY INFORMATION

NOTICE:

This device complies with Part 15 of the FCC Rules. Operation is subject to the following two conditions: (1) This device must not cause harmful interference, and (2) this device must accept any interference received, including interference that may cause undesired operation.

This equipment has been tested and found to comply with the limits for a Class B digital device, in accordance with Part 15 of the FCC Rules.

These limits are designed to provide reasonable protection against harmful interference in a residential installation.

This equipment generates, uses, and can radiate radio frequency energy. If not installed and used in accordance with the instructions, it may cause harmful interference to radio or television reception, which can be determined by turning the equipment off and on.

The user is encouraged to try to correct the interference by one or more of the following measures:

- Reorient or relocate the receiving antenna.
- Increase the separation between the equipment and the receiver.
- Connect the equipment into an outlet on a circuit different than the one the receiver is connected.
- Consult the dealer or an experienced radio/TV technician for help.

PACKAGE CONTENTS

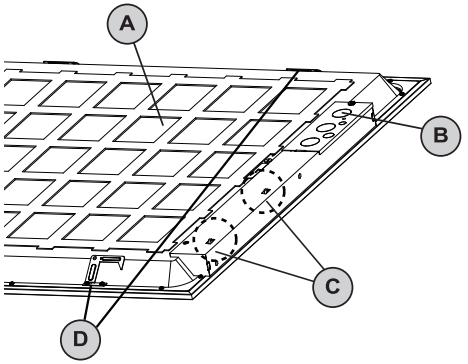

Part	Item Name	Qty.
A	Fixture body	1
B	Input wiring compartment	1
C	CCT and wattage selection switches	2
D	Safety hooks	4
AA	Wire nuts	5



INSTALLATION INSTRUCTIONS

1. Locate the driver compartment access panel (B). Remove the screw, set it aside, and open the panel.

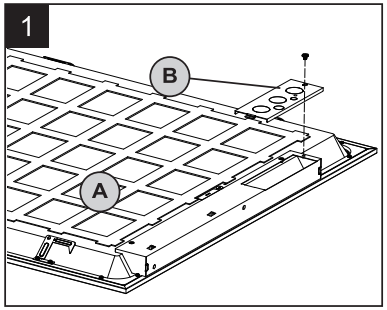

2. Route the building supply wires through one of the conduit knockouts, and secure the conduit to the access panel using an adapter (not supplied). Note that 2 knockouts are available for routing building power supply leads, and one (1) knockout is available for connection of optional low voltage 0-10v dimming leads.

   Note: Do not apply pressure to the panel face. Position the fixture using only the outer edge of the metal frame.

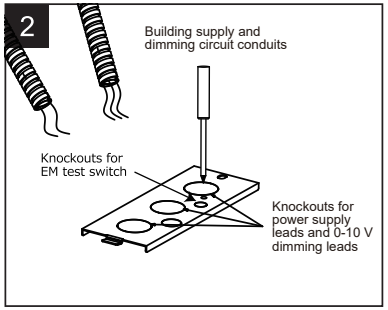

3. Connect the fixture wires to the supply wires - black to black (Line), white to white (Neutral), and green to green (Ground).
   If dimming will be enabled, connect the pink and purple wires to the supply dimming leads as well.
   Once wire connections are made, secure each with a wire nut (AA).

   Note: To connect the sensor, remove the protective cover and connect the sensor cable.

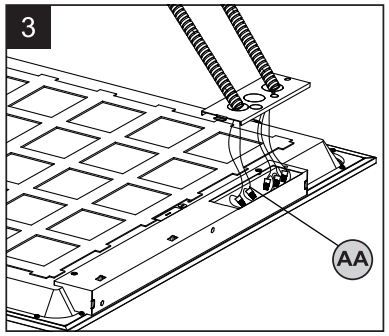

4. Tuck the wires and wire nuts (AA) into each respective compartment. Replace the Driver Compartment access panel (B), avoiding any pinched wires, and secure the panel with screw.

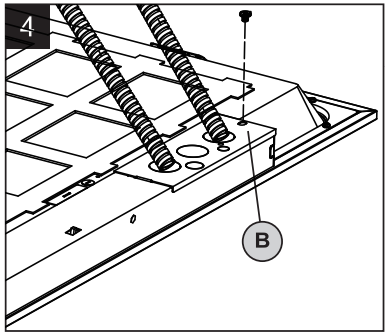

5. Pass the entire fixture above the suspended ceiling grid and align the fixture so that the perimeter of the front lens sits flush and securely on the T-grid. Fold out each of the 4 safety anchor points (E) and loop safety wires through each anchor and secure to building structure.

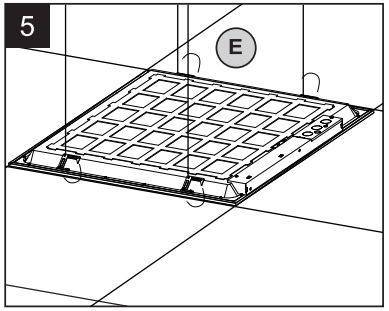

6. **Optional:** Select the desired color temperature (CCT) by using the CCT selection switch on the wiring compartment enclosure by setting the switch position to the desired CCT value as marked. The overall fixture wattage may also be set by using the wattage selection switch by setting the switch position to the desired wattage value as marked.

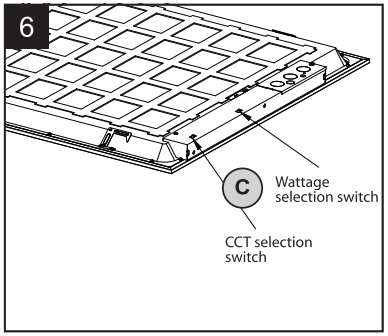

CARE AND MAINTENANCE

Clean with a mild, non-abrasive glass cleaner and soft cloth. Any liquid spray should be applied to the cleaning cloth, not sprayed directly onto the fixture itself. Do NOT use solvents or cleaners containing abrasive agents. When cleaning the fixture, ensure that the power is turned off.

TROUBLESHOOTING

Problem	Possible Solution	Corrective Action
Fixture does not light.	1. Power is off. 2. Incorrect wire connection. 3. Defective wall switch.	1. Check circuit breaker or wall switch. 2. Check wire splices. 3. Replace switch.
Circuit breaker trips when light is turned on.	Crossed wires or power wire is grounded out.	Verify wires are correctly connected.

WARRANTY

This fixture is warranted to perform without defects for five (5) years.

TUROLIGHT®
Tel: 905-479-7093
Toll Free: 1-888-425-7093
Email: sales@turolight.com
Website: www.turolight.com